NT370 SERIES

Tunable Wavelength Lasers with Broad Tunability in IR Range

NT370 series tunable laser seamlessly integrates in a compact housing the nanosecond optical parametric oscillator and Nd:YAG Q-switched laser.

Pumped by fundamental harmonics output the lasers provides tuning in mid- and far-infrared spectral range.

NT373 model delivers eye-safe output at 1570 nm. NT373-XIRx model uses the output from eye-safe OPO to pump IR crystal based cascade OPO for tunable output in 4400–18000 nm range. Customized tuning ranges are available by request. The linewidth of NT373-XIRx model is nearly constant across tuning range and it is less than 6 cm^{-1}.

NT377 model produces tunable output in 2500–4400 nm range. Pulse energy is exceeding 10 mJ for wavelengths shorter than 3600 nm, while linewidth is below 10 cm^{-1} for the wavelengths longer than 3000 nm. Because of narrow linewidth of output radiation (typically in 6–10 cm^{-1} range) the laser is suitable for many infrared spectroscopic applications, for example cavity ring-down spectroscopy, gas detection and remote sensing.

The device is controlled from the remote keypad or from PC through RS232 interface using LabVIEW™ drivers that are supplied together with the system. The remote pad features a backlit display that is easy to read even while wearing laser safety glasses.

System is designed for easy and cost-effective maintenance. Replacement of flashlamps can be done without misalignment of the laser cavity and deterioration of laser performance. OPO pump energy monitoring system helps to increase lifetime of the optical components.

Accessories and optional add-ons

Option	Features
-AW	Water-air cooling option
-20	20 Hz PRR option
-H	Optional 1064 nm output

FEATURES

- *Hands-free, automated wavelength tuning*
- *Up to **15 mJ** pulse energy in **mid-IR** spectral range*
- *Less than 10 cm^{-1} linewidth for most of the tuning range*
- ***3–5 ns** pulse duration*
- ***10** or **20 Hz** pulse repetition rate*
- *Remote control pad*
- *PC control via RS232 and LabView™ drivers*
- *Separate output port for 1064 nm pump beam*
- *OPO pump energy monitoring*
- *Replacement of the flashlamps is done without misalignment of the laser cavity*

APPLICATIONS

- *Infrared spectroscopy*
- *Cavity ring-down spectroscopy*
- *Remote sensing*
- *Material processing*
- *Non-linear spectroscopy*
- *Other laser spectroscopy applications*

SAVANORIU AV. 237, LT-02300 VILNIUS, LITHUANIA TEL +370 5 2649629 FAX +370 5 2641809 E-MAIL SALES@EKSPLA.COM WWW.EKSPLA.CO

SPECIFICATIONS [1]

Model	NT377A	NT373	NT373-XIR
OPO			
Wavelength range	2500–4400 nm	1570 nm	4400–18000 nm [2]
Output pulse energy [3]	12.5 mJ	50 mJ	1 mJ
Linewidth [4]	<10 cm^{-1}	<3 cm^{-1}	<6 cm^{-1}
Scanning step	1 nm	—	1 nm
Typical pulse duration [5]	3–5 ns		
Typical beam diameter [6]	6 mm	6 mm	8 mm
Polarization	horizontal	vertical	horizontal
PUMP LASER [7]			
Pump wavelength	1064 nm		
Max pump pulse energy	300 mJ		
Pulse duration	4–6 ns		
Beam quality	"Hat-Top" in near field		
Beam divergence	<0.5 mrad		
Pulse energy stability (StdDev)	<1 %		
Pulse repetition rate	10 or 20 Hz		
PHYSICAL CHARACTERISTICS			
Unit size (W × L × H)	452 × 1020 × 270 mm	452 × 610 × 270 mm	452 × 1020 × 270 mm
Power supply size (W × L × H)	330 × 520 × 670 mm		
Umbilical length	2.5 m		
OPERATING REQUIREMENTS			
Water consumption (max 20 °C) [8] [9]	10 l/min		
Room temperature	18–27 °C		
Relative humidity	20–80 % (non-condensing)		
Power requirements [10]	208 or 240 V AC, single phase, 50/60 Hz		
Power consumption [11]	1.5 kVA		

1) Due to continuous improvement, all specifications are subject to change without notice. Parameters marked typical are not specifications. They are indications of typical performance and will vary with each unit we manufacture. Unless stated otherwise all specifications are measured at 3000 nm for NT377 unit, at 1570 nm for NT373 unit and at 7000 nm for NT373-XIRx units.

2) Please contact Ekspla for more detailed specifications.

3) Output is specified at wavelengths defined in chapter 1. See tuning curves for typical outputs at other wavelengths.

4) Linewidth is specified at wavelengths defined in chapter 1. See graph below for typical linewidth at other wavelengths.

5) Estimate, assuming that pulse duration from OPO is by approx 1 ns shorter than one from pump laser.

6) Beam diameter is measured at the FWHM level at the output aperture and can vary depending on the pump pulse energy.

7) Laser output will be optimised for OPO operation and specification may vary with each unit we manufacture.

8) Air cooled power supply is available as option.

9) For 10 Hz PRR.

10) Should be specified when ordering.

PERFORMANCE

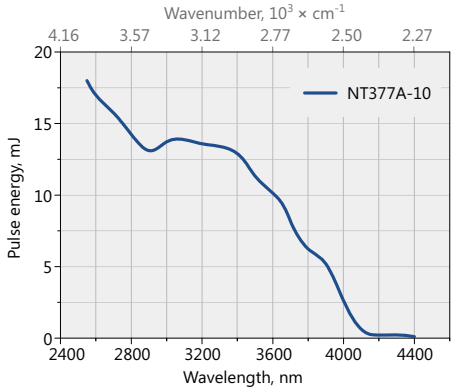

Fig 1. Typical output energy of the NT377A tunable wavelength laser

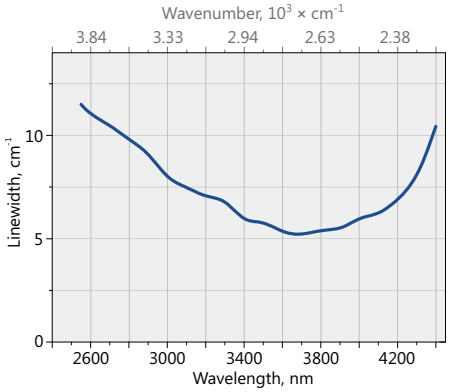

Fig 2. Typical linewidth of the NT377A tunable wavelength laser

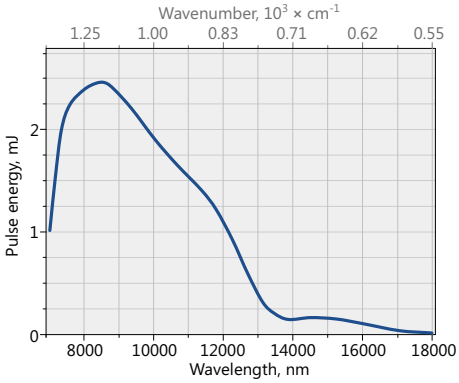

Fig 3. Typical output pulse energy of the NT373-XIR tunable wavelength laser

OUTLINE DRAWINGS

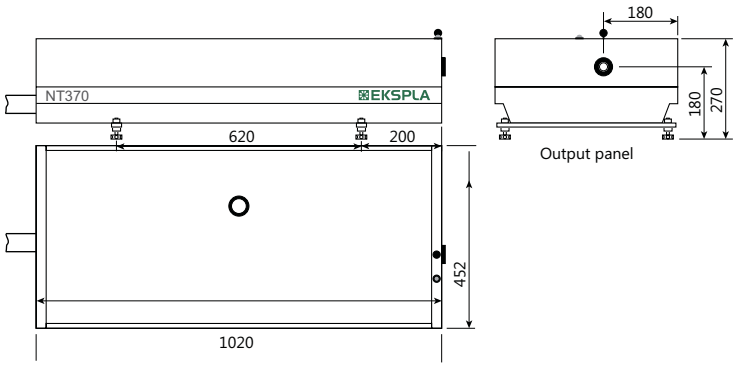

A and NT373-XIR series lasers

Fig 4. Dimensions of NT377

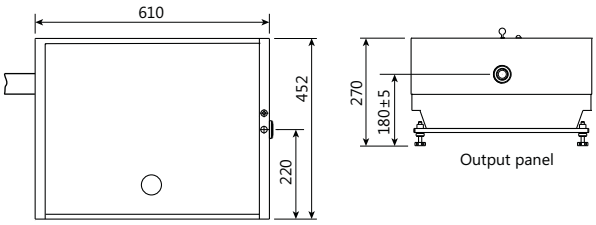

Fig 5. Dimensions of NT373 series laser

PHOTO TECHNICA www.phototechnica.co.jp
フォトテクニカ株式会社
〒336-0017 埼玉県さいたま市南区南浦和 1-2-17
TEL:048-871-0067 FAX:048-871-0068
e-mail:voc@phototechnica.co.jp