HARPIA-TA

new

Ultrafast Transient Absorption Spectrometer

APPLICATION FIELDS

- Photochemistry
- Photobiology
- Photophysics
- Material science
- Semiconductor physics
- Time-resolved spectroscopy

The transient absorption spectrometer HARPIA offers a sleek and compact design together with intuitive user experience and easy day-to-day maintenance meeting the needs of today's scientific world. Adhering to the standards raised by the OPRHEUS line of devices, the entire spectroscopic system is contained in a single monolithic aluminum casing that inherently ensures excellent optical stability and minimal optical path for the interacting beams. HARPIA can be easily integrated with both PHAROS / ORPHEUS and Ti:Sa / TOPAS laser systems. HARPIA features market leading characteristics such as 10^{-5} resolvable signals along with other unique properties such as the ability to work at high repetition rates (up to 1 MHz) when used with PHAROS/ORPHEUS system. High repetition rate allows measuring transient absorption dynamics while exciting the samples with extremely low pulse energies up to several nanojoules.

A number of probe configurations and detection options are available starting with simple and cost effective photodiodes for single wavelength detection and ending with spectrally-resolved broadband detection combined with white light supercontinuum probing. Data acquisition and measurement control are now integrated within the device itself and offer such improved detection capabilities as:

- Single (sample-only) or multiple (sample and reference) integrated spectral detectors
- Simple integration of any user-preferred external spectrograph
- Beam monitoring and self-recalibration capabilities (both along the optical path of the pump/probe beams and at the sample plane) and an option for automated beam readjustment
- Point detectors (photodiodes)
- Straightforward switching between transient absorption or transient reflection measurements
- Capability to combine both transient absorption and Z-scan experiments on the same device.

Moreover, different delay line options can be selected to cover delay windows from 2 ns to 8 ns and HARPIA may house either standard linear leadscrew (20 mm/s) or fast ball-screw (300 mm/s) optical delay stages.

A number of optomechanical peripherals are compactly enclosed in the HARPIA casing, including:

- An optical chopper that can either phase-lock itself to any multiple of the frequency of the laser system or operate in a free-running internally-referenced regime
- Motorized and calibrated Berek's polarization compensator that can automatically adjust the polarization of the pump beam (optional)
- Motorized transversely translatable supercontinuum generator (applicable for safe and stable supercontinuum generation in materials such as CaF_2 or MgF_2; optional)
- Automated sample moving unit that translates the sample in the focal plane of the pump and probe beams, thus avoiding local sample overexposure (optional)
- Integrated PC (optional)
- Sample stirrer.

Moreover, the new HARPIA is designed to be compatible with any user-favored cryostat and/or peristaltic pump system (see mounting sheme). Capabilities of the new HARPIA can be further extended by introducing a third beam to the sample plane, thus allowing the user to perform multi-pulse transient absorption measurements.

For simple systems – all-in-one package (no external electronics rack).

Rev. 20181219

SPECIFICATIONS

Probe wavelength range, supported by the optics	240 – 2600 nm
Probe wavelength range, white light supercontinuum generator, pumped by 1030 nm	350 – 750 nm, 480 – 1100 nm
Probe wavelength range, white light supercontinuum generator, pumped by 800 nm	350 – 1100 nm
Probe wavelength range of the detectors	200 nm – 1100 nm, 700 nm – 1800 nm, 1.2 µm – 2.6 µm
Spectral range of the spectral devices	180 nm – 24 µm, achievable with interchangeable gratings
Delay range	4 ns, 6 ns, 8 ns
Delay resolution	4.17 fs, 6.25 fs, 8.33 fs
Laser repetition rate	1 – 1000 kHz (digitizer frequency <2 kHz)
Time resolution	< 1.4 x the pump or probe pulse duration (whichever is longer)
Physical dimensions, L×W×H	730 × 420 × 160 mm [1]
Sample area	205 × 215 mm

[1] *Without external spectrograph.*

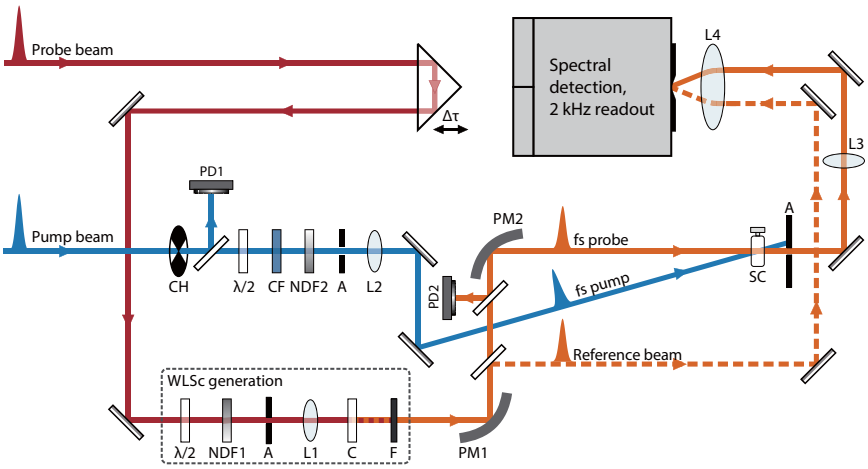

HARPIA-TA optical layout for pump-probe experiments

Cryostat mounting scheme

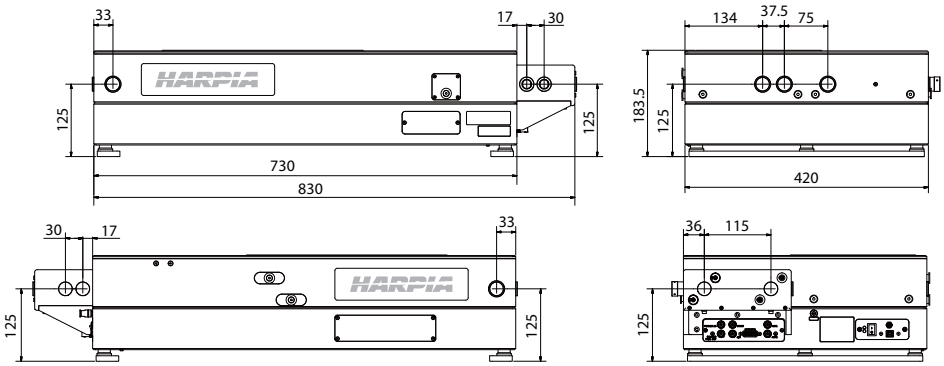

HARPIA-TA outline drawings

PHOTO TECHNICA www.phototechnica.co.jp
フォトテクニカ株式会社
〒336-0017 埼玉県さいたま市南区南浦和 1-2-17
TEL:048-871-0067 FAX:048-871-0068
e-mail:voc@phototechnica.co.jp