BLAZER-GR Series

High-Power Industrial Green PS-Laser

FEATURES & BENEFITS:

- 15-50W@532nm
- 100-2000kHz repetition rate
- ＜15ps pulse duration
- High Beam quality $M^2 \leq 1.3$
- Compact, hermetic and robust mechanical design
- Fully detachable umbilical
- Burst mode
- Integrated process shutter
- Position synchronized output

BLAZER-GR series laser is a high-power industrial-grade greeb picosecond laser with the highest average output power of >100W, high peak power and repeatable frequency up to 2000 kHz.

This series of lasers have compact structure, small volume, high stability in long time operation and are suitable for rapid system integration.

APPLICATIONS:

- Cutting and drilling of PCB/FPC
- Selective removal of complex composite structures from dissimilar matrials
- Cutting and drilling of brittle materials, transparent material

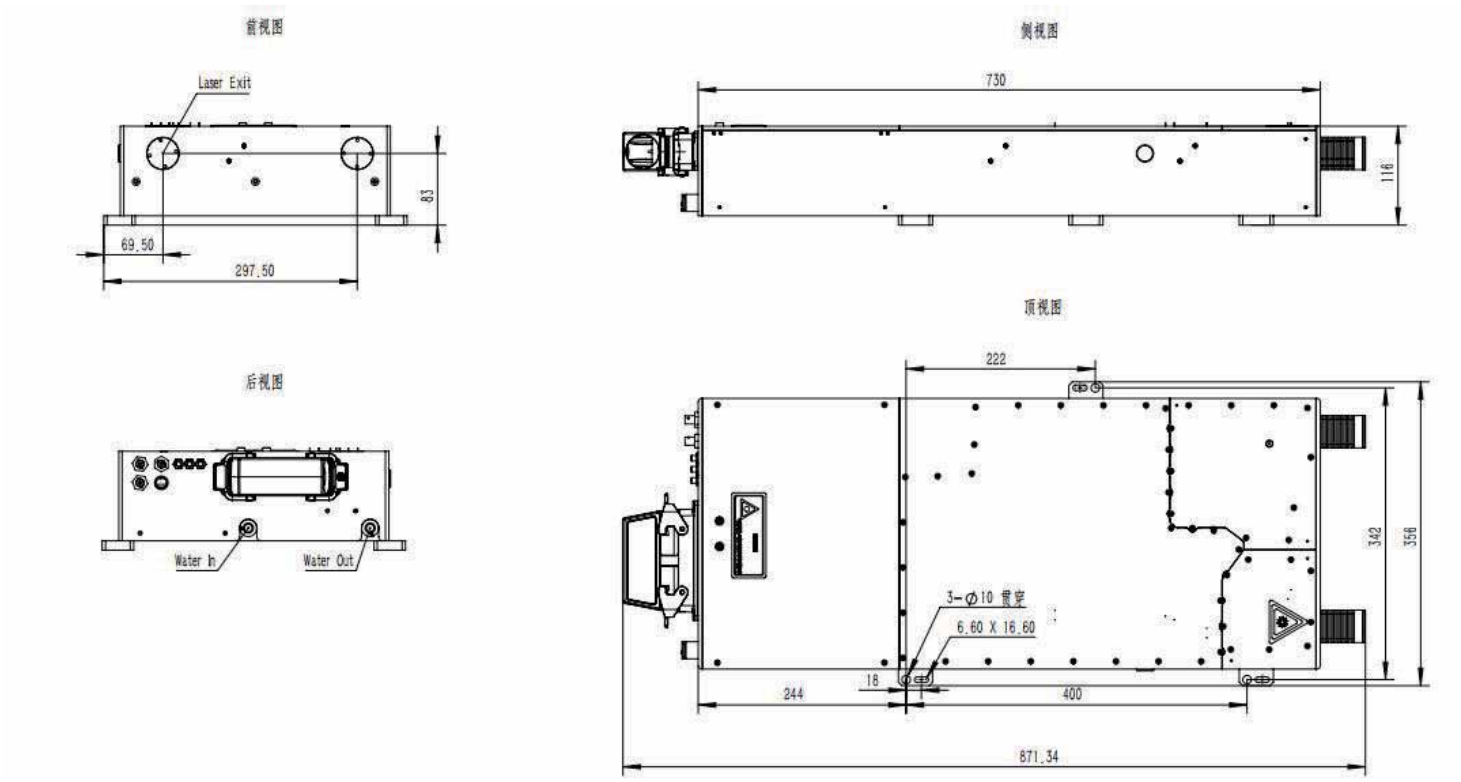

BLAZER-GR-10/30 Mechanical Specifications Unit: mm

BLAZER-GR Series Datasheet

Grace Laser

SPECIFICATIONS	BLAZER-GR Series		
	GR-10	GR-30	GR-50
Single Wavelength Output (nm)	532 nm		
Pulse Repetition Rate Range[1] (kHz)	100 – 2000 kHz		
Pulse Duration (ps)	< 15		
Power[2] (W)	10	30	50
Maximum Pulse Energy (μJ)	50	60	100
Beam Spatial Profile	TEM_{00}		
Beam Quality Parameter (M^2)	≤1.3		
Beam Diameter (mm)	~2mm (Customizable)		
Pulse-to-Pulse Energy Stability (RMS)	< 2%		
Average Power Stability[3] (RMS)	< 2%		
Polarization Ratio	> 100:1		
Beam Circularity (%)	> 85		
Beam-Pointing Stability[4] (μrad/℃)	< 50		
Beam Divergence, full angle[5] (mrad)	< 1mrad		
Warm-up Time from Chiller Start (minutes)	< 40		
Electrical Supply	220V AC ±5% / 50-60Hz		
Power Consumption	< 2.5kW (typical 50W at 500kHz)		
Cooling Type	Closed-loop water cooling		
Dimensions			
Laser Head	875×356×116 mm	875×356×116 mm	875×459×116 mm
Power Supply	4U	4U	4U
BURST MODE OPERATION			
Maximum Number of Pulses in Burst	10		
OPERATING SPECIFICATIONS			
Allowed Temperature Range During Operation	15-35℃		
Humidity	<65%		

NOTES:
1. All characteristics measured at 500kHz unless otherwise noted
2. Please provide operating Rep. rate for optimum output power.
3. Average in 8 hours with room temperature variation δT<3℃
4. Maximum deviation from beam mean centroid
5. Full angle for 86.5% of energy

PHOTO TECHNICA www.phototechnica.co.jp
フォトテクニカ株式会社
〒336-0017 埼玉県さいたま市南区南浦和 1-2-17
TEL:048-871-0067 FAX:048-871-0068
e-mail:voc@phototechnica.co.jp

Grace Laser Technology Co., Ltd
Building 16, No.8 Anping North Street, Shunyi District, Beijing 101318 China
Postcode: 101318
Tel: +86 010-60401920 Fax: +86 010-60401720 Email: sales@gracelaser.com
Web: www.gracelaser.com

Last update: 18/06/2020